Cambridge International AS & A Level

Cambridge International Examinations
Cambridge International Advanced Subsidiary and Advanced Level

CANDIDATE NAME

CENTRE NUMBER

CANDIDATE NUMBER

6689169173

PHYSICS **9702/33**

Paper 3 Advanced Practical Skills 1 **October/November 2018**

2 hours

Candidates answer on the Question Paper.

Additional Materials: As listed in the Confidential Instructions.

READ THESE INSTRUCTIONS FIRST

Write your Centre number, candidate number and name on all the work you hand in.
Write in dark blue or black pen.
You may use an HB pencil for any diagrams or graphs.
Do not use staples, paper clips, glue or correction fluid.
DO **NOT** WRITE IN ANY BARCODES.

Answer **both** questions.
You will be allowed to work with the apparatus for a maximum of one hour for each question.
You are expected to record all your observations as soon as these observations are made, and to plan the presentation of the records so that it is not necessary to make a fair copy of them.
You are reminded of the need for good English and clear presentation in your answers.

Electronic calculators may be used.
You may lose marks if you do not show your working or if you do not use appropriate units.

Additional answer paper and graph paper should be used only if it becomes necessary to do so.

At the end of the examination, fasten all your work securely together.
The number of marks is given in brackets [ ] at the end of each question or part question.

For Examiner's Use	
1	
2	
Total	

This document consists of **12** printed pages.

© UCLES 2018

CAMBRIDGE International Examinations

You may not need to use all of the materials provided.

1 In this experiment, you will investigate an electrical circuit.

(a)
- Place the 15 Ω resistor in component holder P.
- Place the 22 Ω resistor in component holder Q.
- Set up the circuit shown in Fig. 1.1.

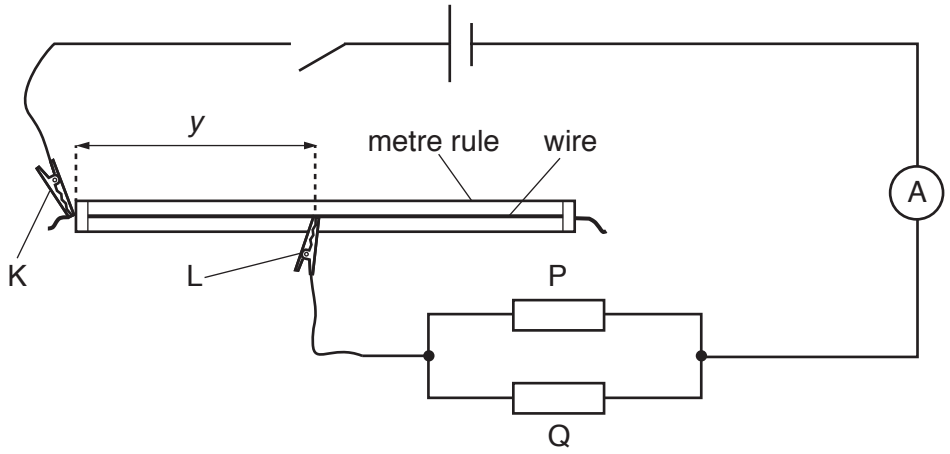

Fig. 1.1

- K and L are crocodile clips.

  The resistors in the component holders have resistances *P* and *Q*.

  Place L approximately half-way along the wire.
- The distance between K and L is *y* as shown in Fig. 1.1.

  Record *P*, *Q* and *y*.

P = ...

Q = ...

y = ...

- Close the switch.
- Record the ammeter reading *I*.

I = ...

- Open the switch.

[1]

© UCLES 2018

(b) • Change one or both of the resistors in P and Q.

• Record the new values of P and Q.

P = ...

Q = ...

• Close the switch.

• Change the position of L on the wire so that the ammeter reading is as close as possible to the value for I in **(a)**.

• Record y.

y = ...

• Open the switch.

[1]

(c) Repeat **(b)** until you have six sets of readings of P, Q and y. Include your readings from **(a)** and **(b)**.

Record your results in a table. Include values of $\frac{PQ}{P+Q}$ in your table.

[9]

(d) **(i)** Plot a graph of y on the y-axis against $\frac{PQ}{P+Q}$ on the x-axis. [3]

(ii) Draw the straight line of best fit. [1]

(iii) Determine the gradient and y-intercept of this line.

gradient = ...

y-intercept = ...

[2]

© UCLES 2018

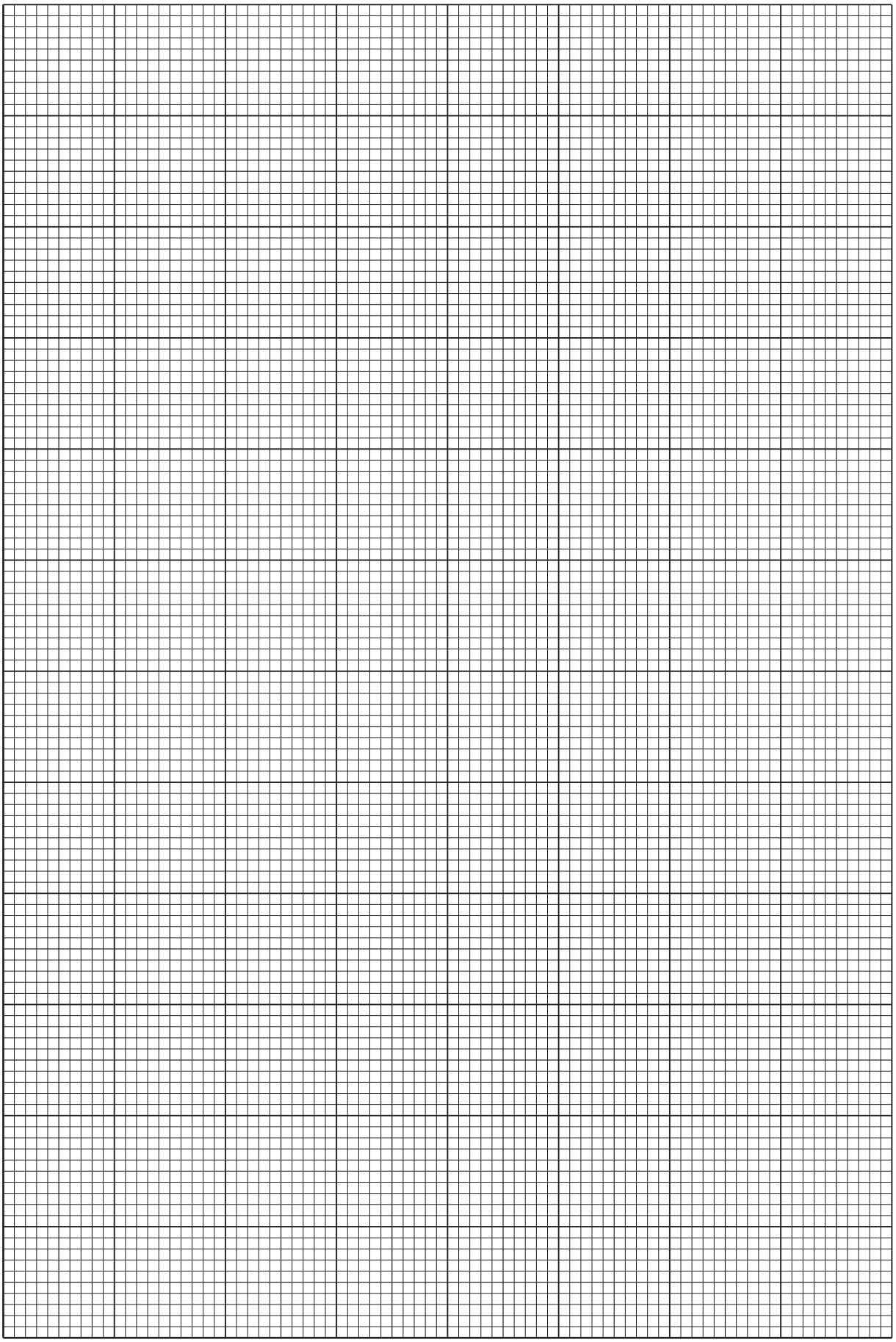

© UCLES 2018

[Turn over

(e) It is suggested that the quantities y, P and Q are related by the equation

$$y = -\frac{MPQ}{P+Q} + N$$

where M and N are constants.

Using your answers in **(d)(iii)**, determine values for M and N.
Give appropriate units.

$M =$ .....

$N =$ .....
[2]

(f) Theory suggests that

$$\frac{N}{M} = \frac{E}{I}$$

where E is the electromotive force (e.m.f.) of the cell.

Calculate E. Give an appropriate unit.

$E =$ .....[1]

[Total: 20]

© UCLES 2018

You may not need to use all of the materials provided.

2 In this experiment, you will investigate the equilibrium of a system of three identical springs.

(a) You have been provided with three springs attached to a ring.

Measure and record the unstretched length S of the coiled section of one of the springs, as shown in Fig. 2.1.

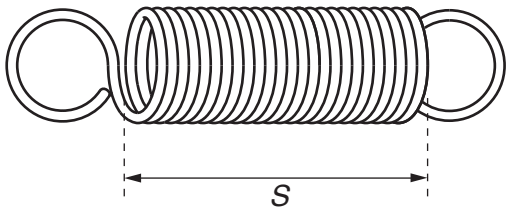

Fig. 2.1

S = ...[1]

(b) (i) • Set up the apparatus as shown in Fig. 2.2.

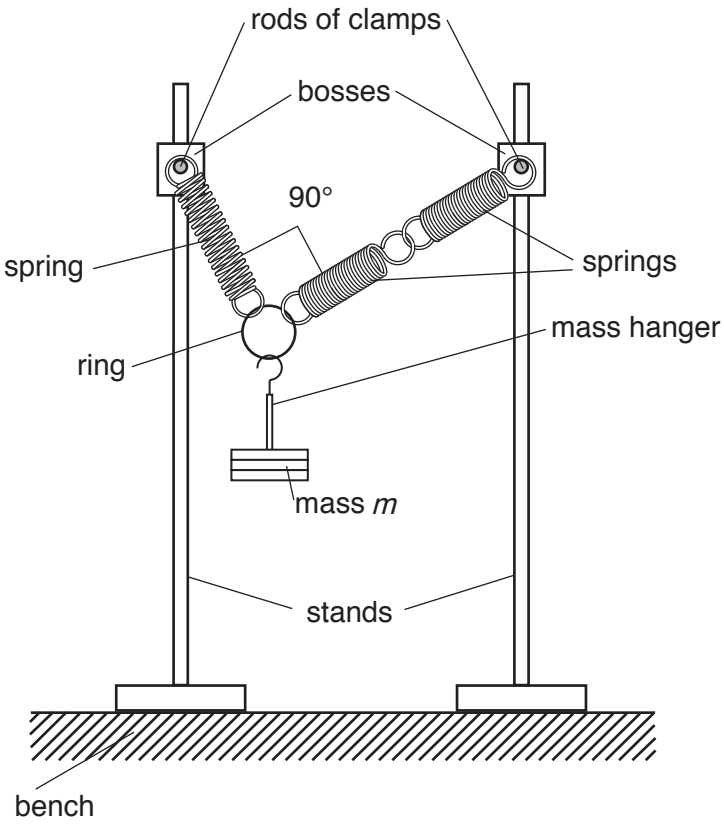

Fig. 2.2

- The total mass *m* of the mass hanger and the slotted masses should be 0.300 kg.
- Adjust the position of the bosses so that the centres of the rods of the clamps are at the same height above the bench.
- Change the separation of the stands until the angle between the springs is 90°.

© UCLES 2018

- The lengths S_1 and S_2 of the coiled sections of the two springs attached to the ring are shown in Fig. 2.3.

  The angle between the single spring and the vertical is θ.

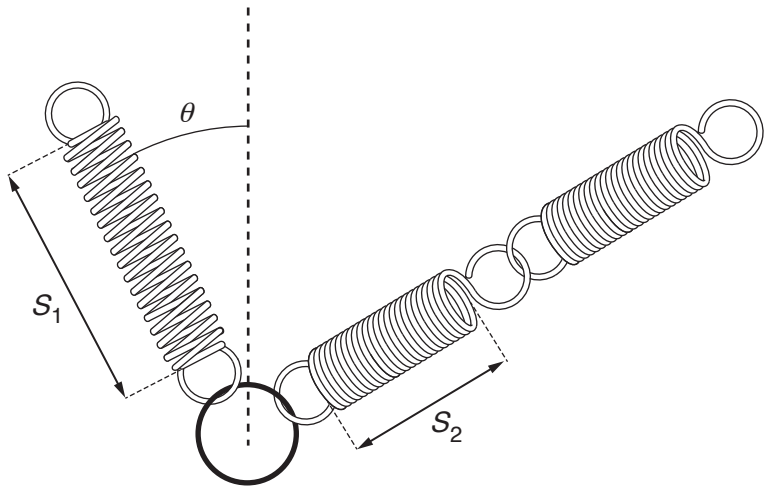

Fig. 2.3

Measure and record m, S_1, S_2 and θ.

m = ... kg

S_1 = ...

S_2 = ...

θ = ... °

[2]

(ii) Estimate the percentage uncertainty in your value of θ.

percentage uncertainty = ...[1]

(iii) Calculate $e_1 \cos\theta$ and $e_2 \sin\theta$ where

$$e_1 = S_1 - S \quad \text{and} \quad e_2 = S_2 - S.$$

$e_1 \cos\theta =$ .....

$e_2 \sin\theta =$ .....
[1]

(iv) Justify the number of significant figures that you have given for your value of $e_1 \cos\theta$.

.....

.....

.....[1]

(c) Change m to 0.600 kg and repeat **(b)(i)** and **(b)(iii)**.

$m =$ ..... kg

$S_1 =$ .....

$S_2 =$ .....

$\theta =$ ..... °

$e_1 \cos\theta =$ .....

$e_2 \sin\theta =$ .....
[3]

© UCLES 2018

(d) It is suggested that the relationship between e_1, e_2, θ and m is

$$e_1 \cos\theta + e_2 \sin\theta = \beta m$$

where β is a constant.

(i) Using your data, calculate two values of β.

first value of β = ...

second value of β = ...
[1]

(ii) Explain whether your results support the suggested relationship.

.....

.....

.....

.....[1]

(e) Theory suggests that

$$\beta = \frac{g}{k}$$

where the acceleration of free fall g is 9.81 m s^{-2} and k is the spring constant of a spring.

Using your second value of β, calculate k. Give an appropriate unit.

k = ...[1]

(f) **(i)** Describe four sources of uncertainty or limitations of the procedure for this experiment.

1. .....

.....

2. .....

.....

3. .....

.....

4. .....

.....

[4]

(ii) Describe four improvements that could be made to this experiment. You may suggest the use of other apparatus or different procedures.

1. .....

.....

2. .....

.....

3. .....

.....

4. .....

.....

[4]

[Total: 20]

Permission to reproduce items where third-party owned material protected by copyright is included has been sought and cleared where possible. Every reasonable effort has been made by the publisher (UCLES) to trace copyright holders, but if any items requiring clearance have unwittingly been included, the publisher will be pleased to make amends at the earliest possible opportunity.

To avoid the issue of disclosure of answer-related information to candidates, all copyright acknowledgements are reproduced online in the Cambridge International Examinations Copyright Acknowledgements Booklet. This is produced for each series of examinations and is freely available to download at www.cie.org.uk after the live examination series.

Cambridge International Examinations is part of the Cambridge Assessment Group. Cambridge Assessment is the brand name of University of Cambridge Local Examinations Syndicate (UCLES), which is itself a department of the University of Cambridge.